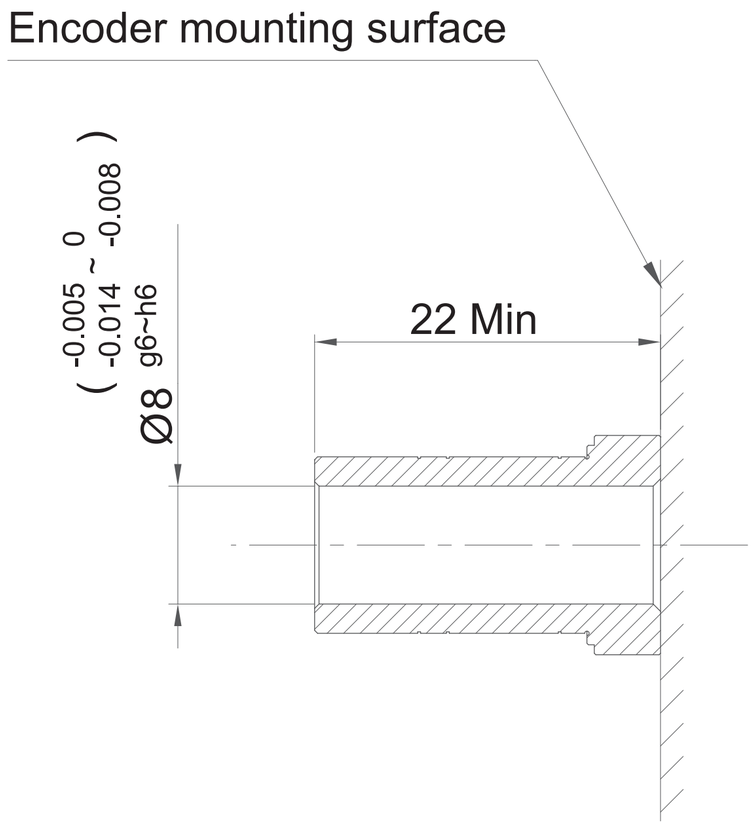

Recommended dimensions on shaft

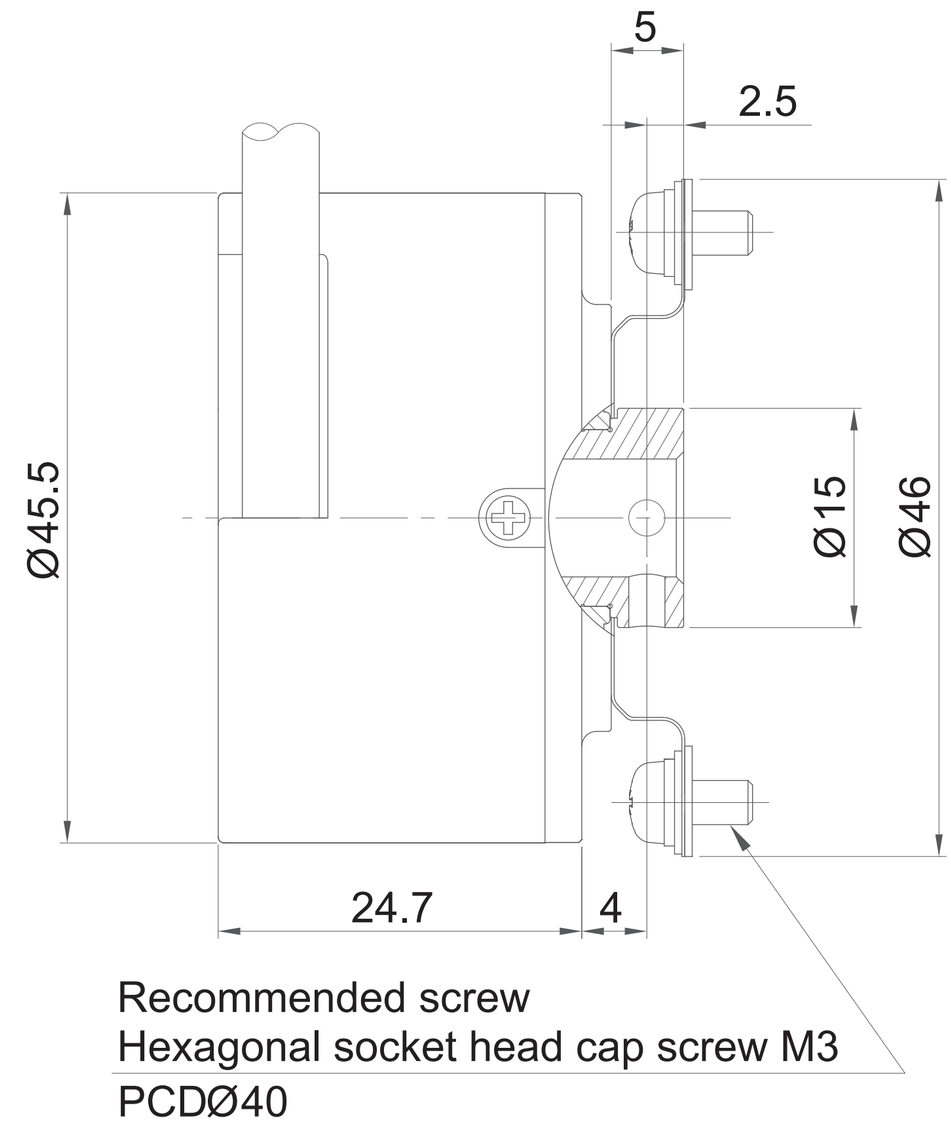

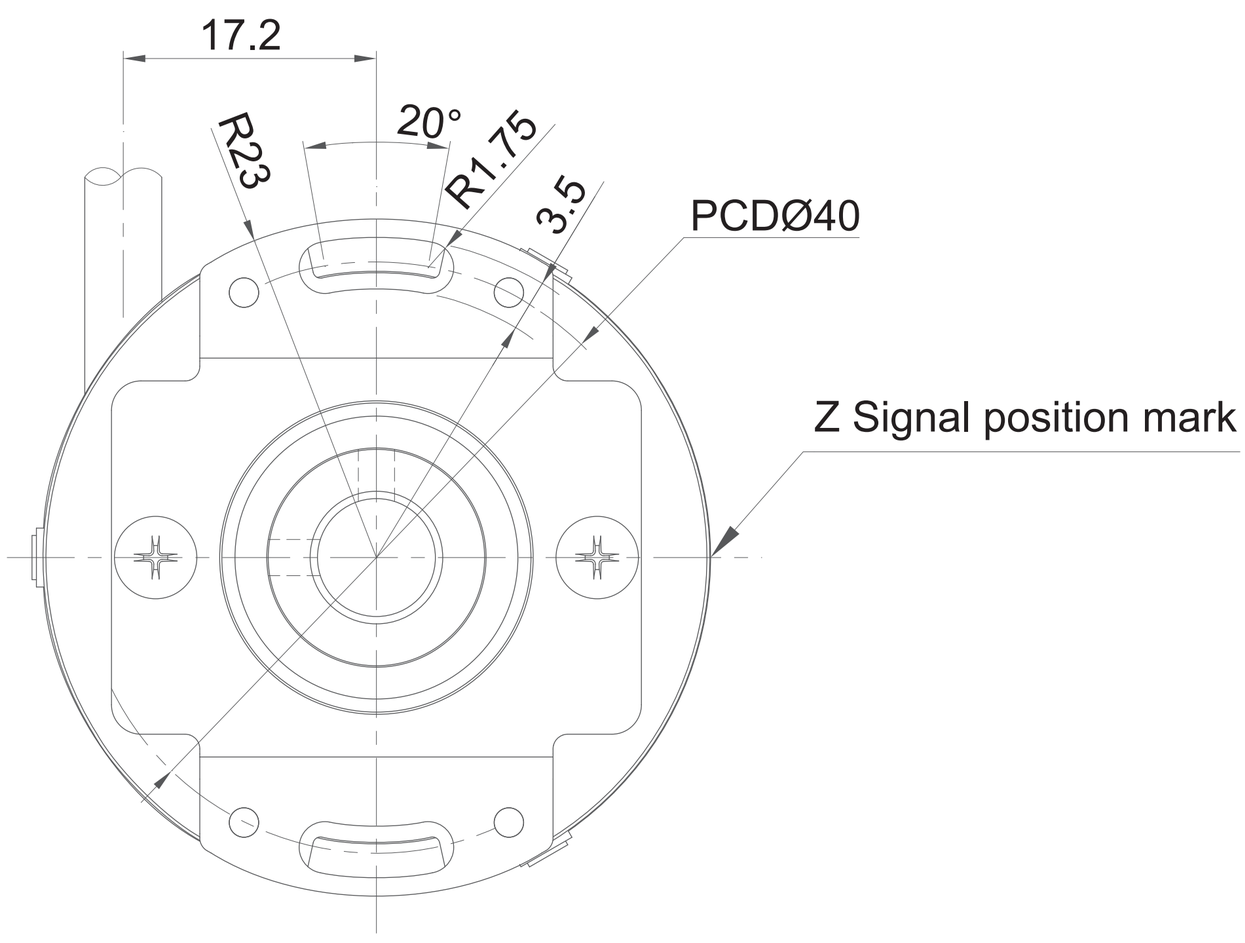

Installation detail

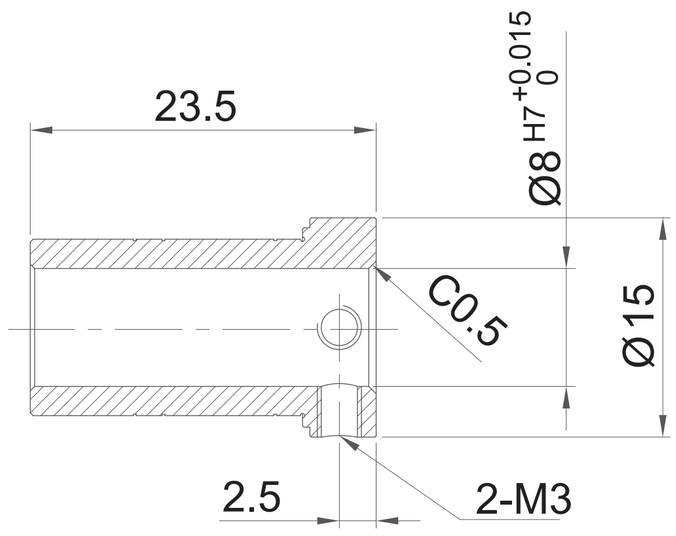

Shaft details

Tolerance is ±0.5mm unless specified.